Ball valves AISI 316

2 ways Trale ball valve

2 ways ball valve female BSP TrAle

Stainless Steel AISI 316-L

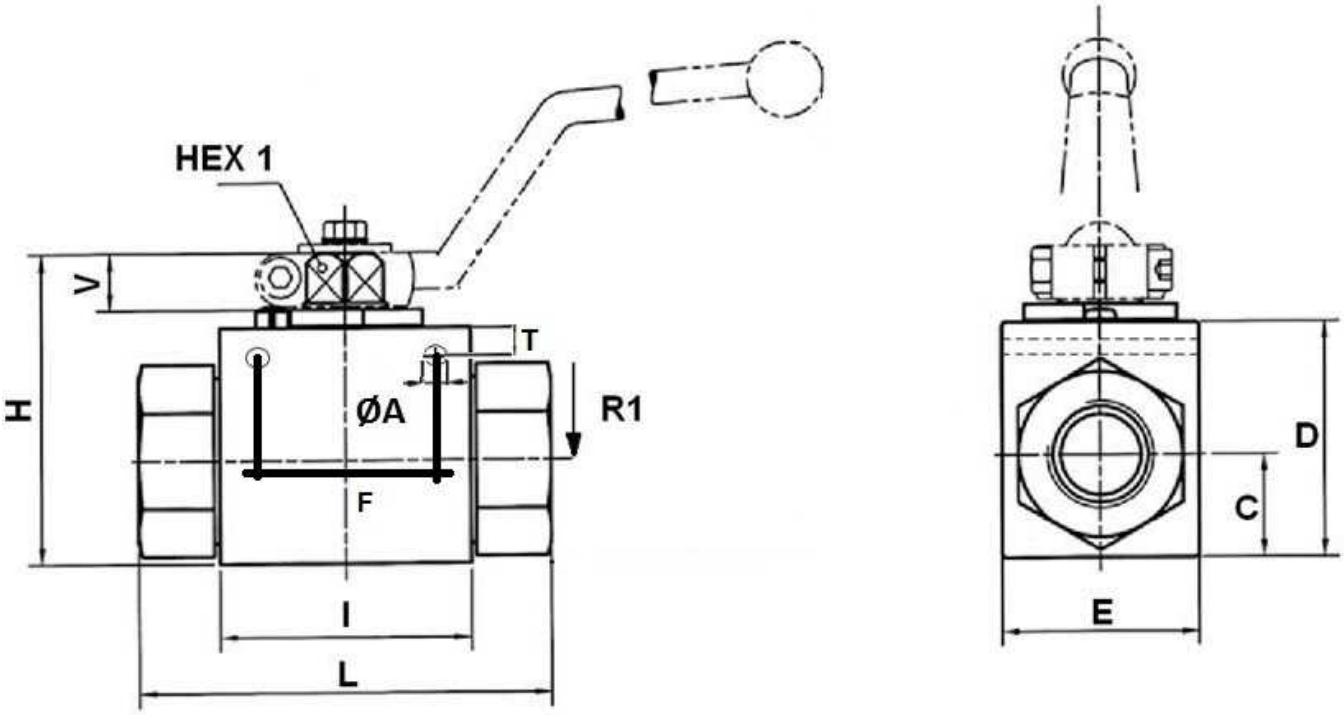

Ball in stainless steel

O-ring: FKM

Ball Seat Gasket: POM-C

Part nº	DN	R1	MAX. PRESSURE (bar)	HEX 1	ØA	C	D	E	F	H	I	L	T	V
ZGB2V 1/8	4	1/8" BSP	500	9	4,5	13	32	28	26	44,5	37	69	5	8
ZGB2V 1/4	6	1/4" BSP	500	9	4,5	13	32	28	26	44,5	37	69	5	8
ZGB2V 3/8	10	3/8" BSP	500	9	6,5	17	40	32	32	52,5	42	72	5	8
ZGB2V 1/2	13	1/2"BSP	500	9	6,5	17	40	35	37,5	52,5	48	83	4,8	8
ZGB2V 3/4	20	3/4" BSP	315	14	6,5	24	57	48	45	75	60	95	6,5	12
ZGB2V 1	25	1" BSP	315	14	6,5	28,5	64	57	55	82	65	113	6	12

Working temperature: --50 / 100ºC
ZAMAK handle material

The information gathered in this technical documentation (Catalogue) has an informative character and can be modified without previous notice. DICSA will not accept any type of responsibility resulting from an inappropriate use of the product, except the ones related to manufacturing defects.